NOTES:

1. TO INSPECT ASSEBMLY, FOLLOW FIRST ARTICLE AND IN PROCESS INSPECTION SHEET.

BILL OF MATERIAL (CURRENT LEVEL)

ITEM	PT/ASSY	DESCRIPTION	TYPE	QTY.
1	1995	MOUNTING FLANGE	PART	3
2	199X	GRAB BAR MOUNTING HARDWARE PACK	ASSEMBLY	3
3	1572	DECORATIVE RING	PART	3
4	5086	42" GRAB BAR, ADAPTER AND POST ASSY	ASSEMBLY	1

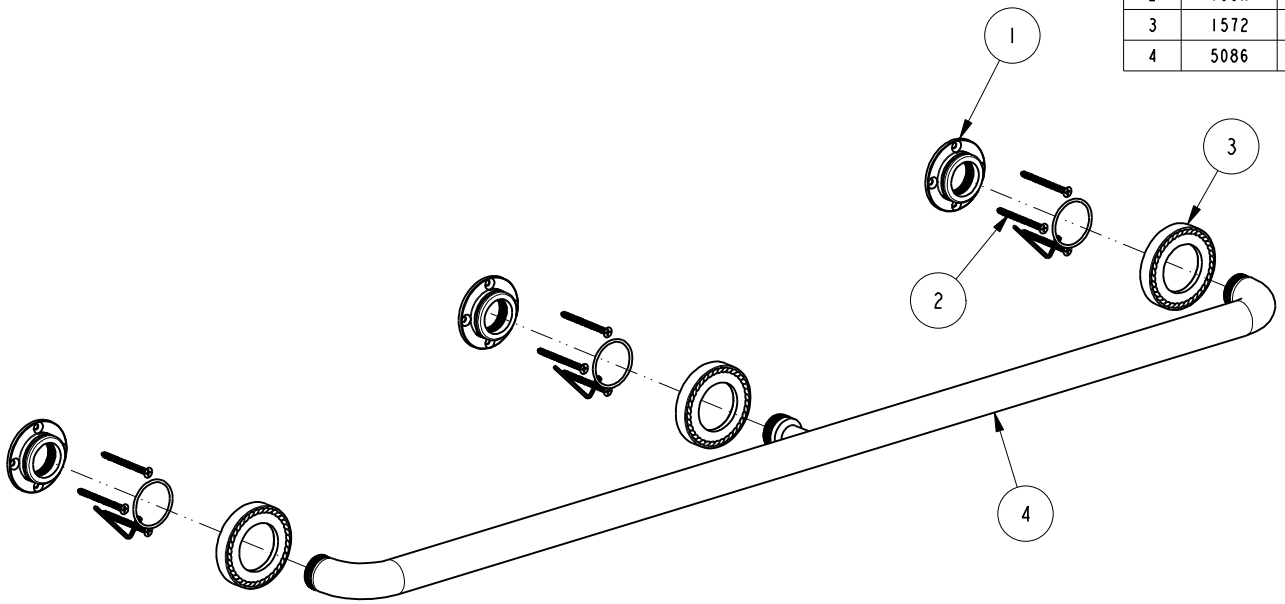

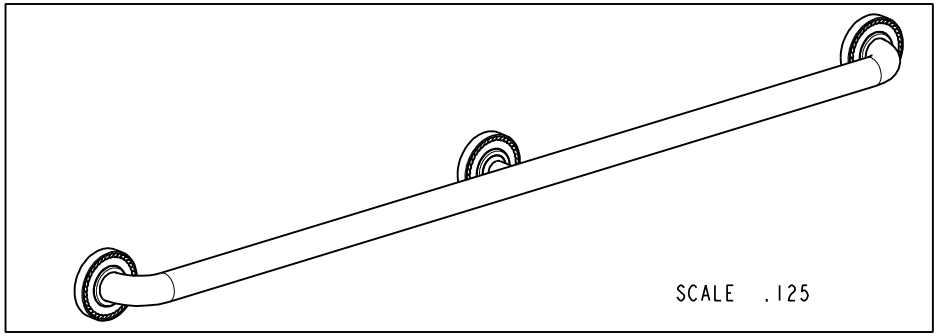

ZONE	REV	DESCRIPTION	DATE	APPROVED
-	B	EN-4300i	06/22/21	R.S.
-	A	EN-4143	03/20/20	J.M.
-	-	EN-3279b	07/13/17	J.M.

COPYRIGHT 2005 BRASSTECH, INC. THESE DRAWINGS AND THE DESIGNS DEPICTED HEREIN ARE THE PROPRIETARY PROPERTY OF BRASSTECH. ANY USE OR REPRODUCTION IS SUBJECT TO THE EXPRESS APPROVAL OF BRASSTECH. UNAUTHORIZED USE IS STRICTLY PROHIBITED. ALL RIGHTS RESERVED.

TESTING	-	-	-
ASSEMBLY	-	-	-
PLATING	-	-	-
POLISHING	-	NEXT ASSY	USED ON
MACHINING	-	APPLICATION	
TOOLING FIXTURE #		REMOVE ALL BURRS AND SHARP EDGES	

UNITS ARE: INCHES [MM]
TOLERANCES ARE:
FRACTIONS ±1/16" DECIMALS .X ±.1 [2,5] .XX ±.06 [1,5] ANGLES ±1°
(X.XXX) DENOTES CRITICAL DIMS.
ALL THREADS ARE CRITICAL

DRAWN	JINSON	06/22/21
CHECKED	R.S.	06/22/21
APPROVED	R.S.	06/22/21

BRASSTECH INCORPORATED
2001 CARNEGIE AVE.
SANTA ANA, CA 92705
(949) 417-5207

42" STRAIGHT GRAB BAR ASSEMBLY

DWG NO. 1020-3942 REV B

SCALE .150 REF. - SHEET 1 OF 2

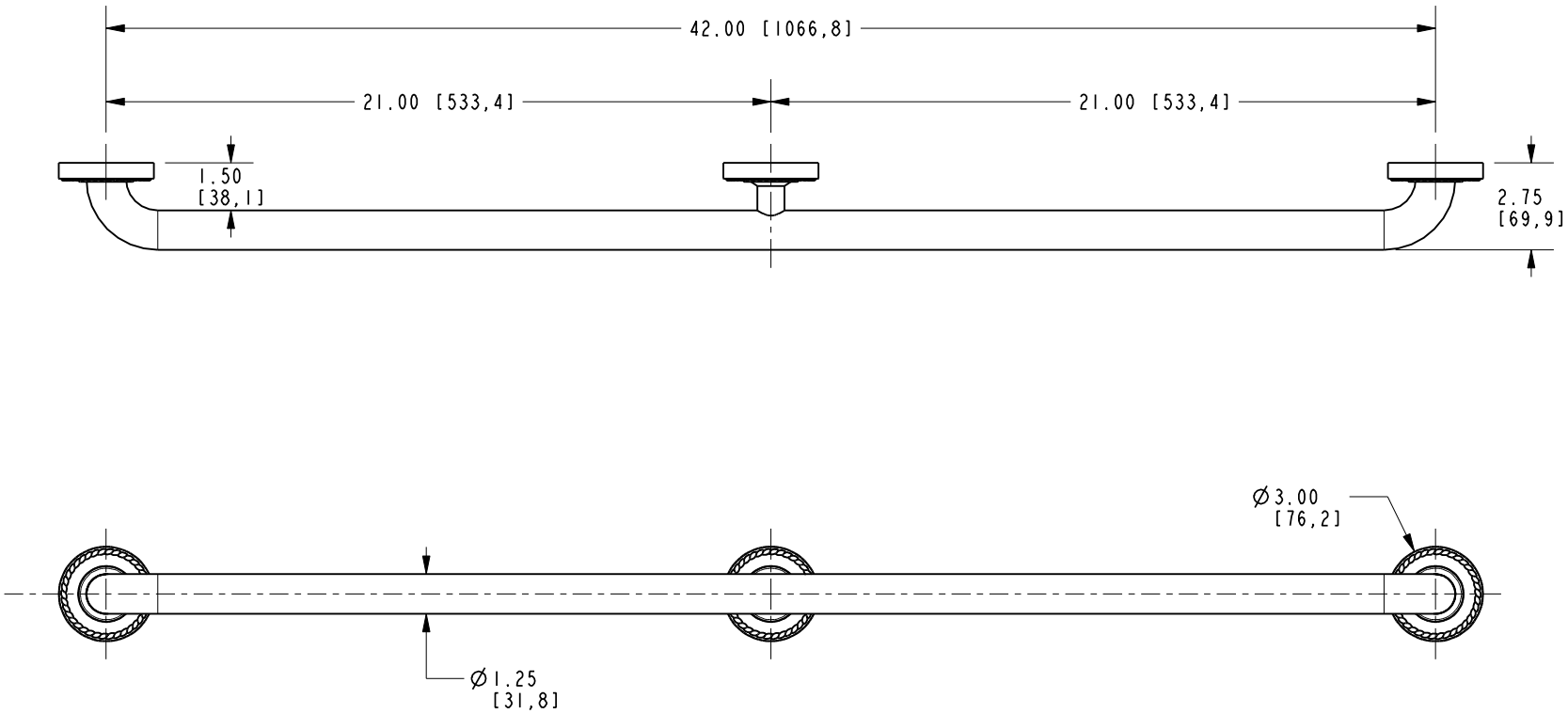

BRASSTECH INCORPORATED

2001 E. CARNEGIE AVE.
SANTA ANA, CA 92705
(949) 417-5207

DWG NO.	REV
1020-3942	B

SCALE	REF.	SHEET
.175	-	2 OF 2